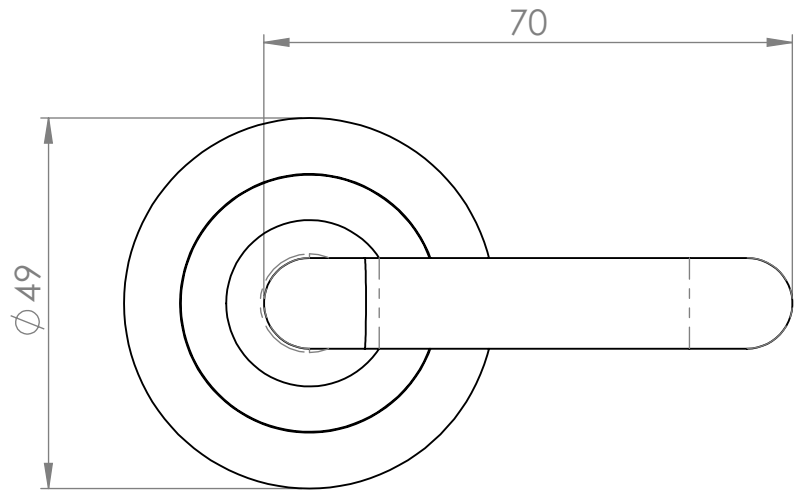

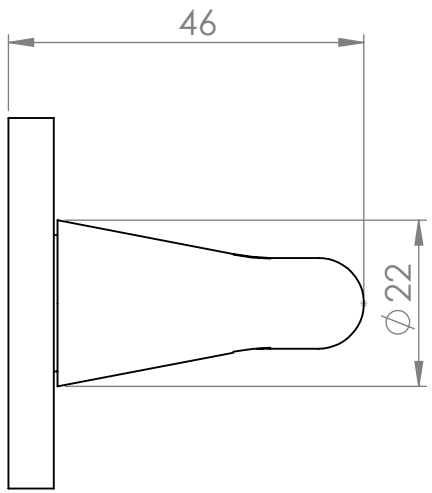

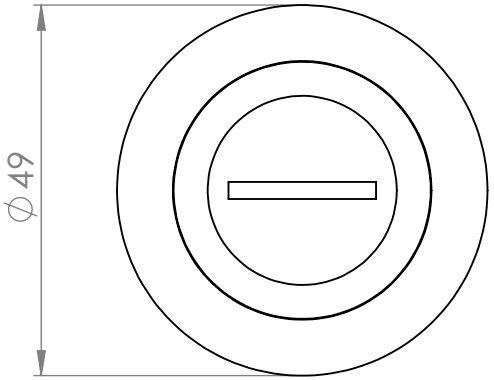

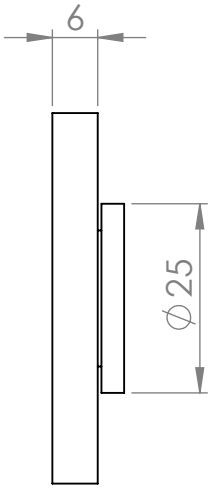

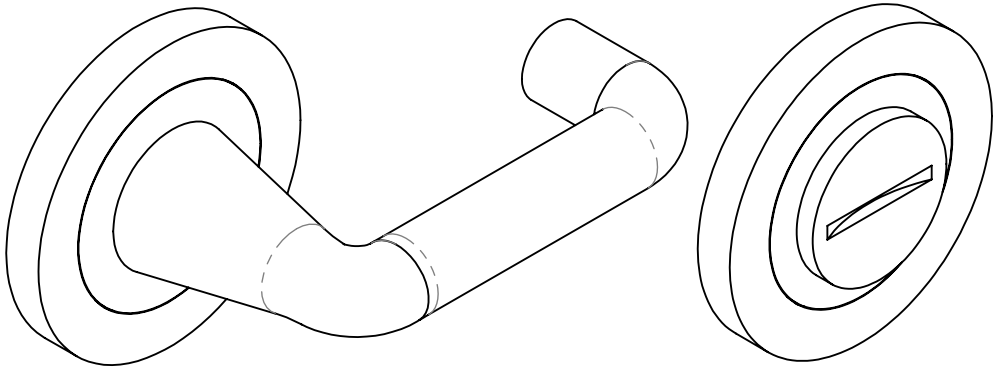

EUROSPEC

SW105

This drawing is the property of Carlisle Brass Limited, all design rights reserved